CSEPEL 125

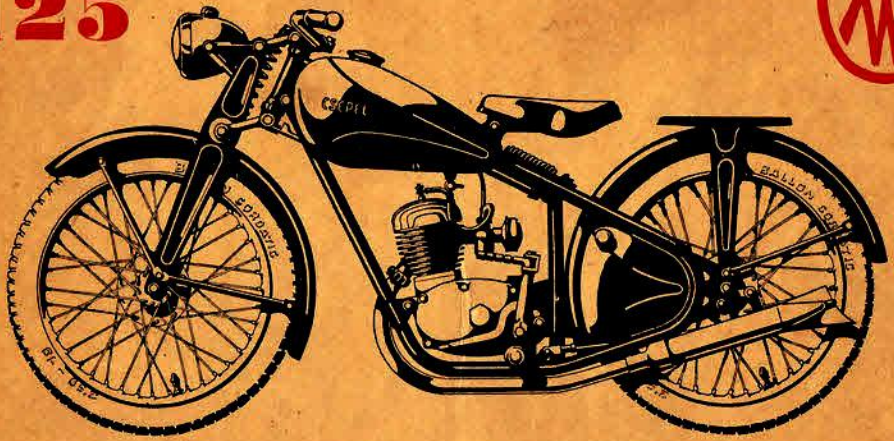

SPARE PARTS LIST

1. Gearbox, Cylinder

1 Crankcase, L.-Hand Half
2 Crankcase, R.-Hand Half
3 Crankcase Gear Side Cover
4 Chaincase
5 Crankcase Joint Washer
6 Crankcase Joint Washer
7 Bush
8 Cap Screw
9 Washer
10 Oil Filler Cap
11 Washer
12 Cap Screw
13 Washer
14 Stud
15 Stud
16 Stud
17 Bush
18 Stud
19 Washer
20 Nut
21 Pin
22 Stud
23 Washer
24 Nut
25 Cylinder Barrel
26 Cylinder Head
27 Cylinder Base washer
28 Stud
29 Washer
30 Nut

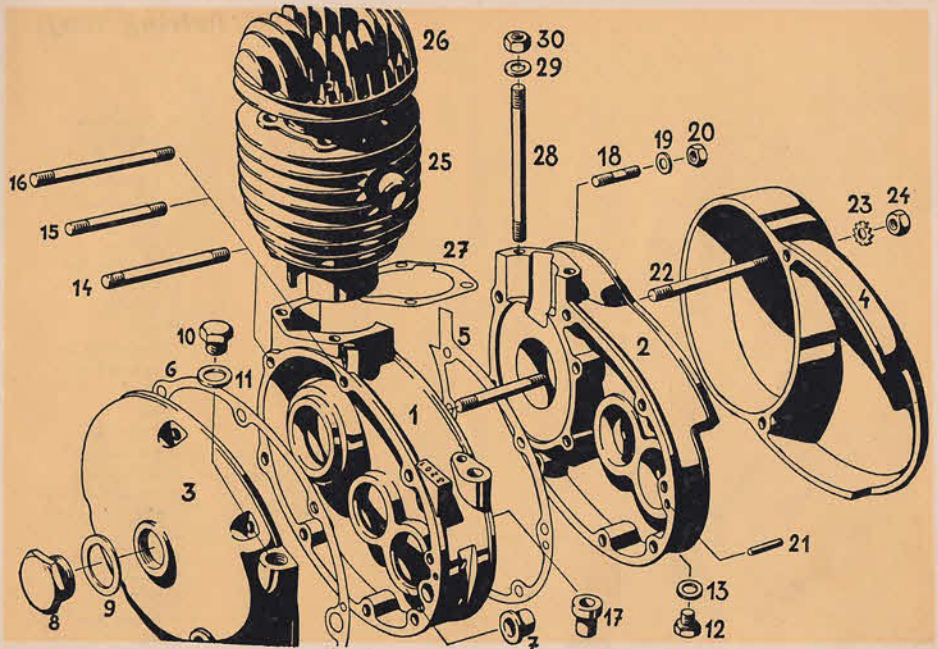
26
30
29
25
28
18
19
20
16
15
14
27
23
24
22
4
10
6
11
5
2
1
3
21
13
8
9
17
12
7

2. *Driving Shaft*

31 Driving Shaft, complete
32 Driving Shaft L.-Hand Half
33 Driving Shaft, R.-Hand Half
34 Crank pin
35 Connecting Rod
36 Bush
37 Roller set
38 Bush
39 Gudgeon Pin Circlip
40 Gudgeon Pin
41 Piston
42 Pin
43 Piston Ring
44 Ball bearing
45 Sealing Ring
46 Driving Shaft Pinion 18 T
47 Washer
48 Nut, left handed thread
49 Nut
50 Distance Bush
51 Key

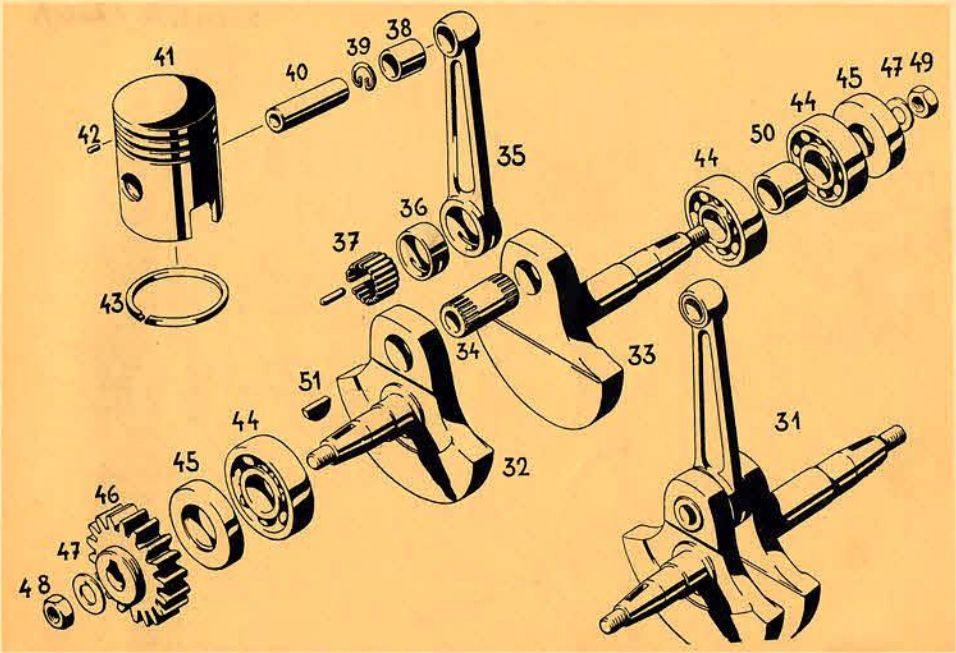
41
40
39
38
42
35
36
37
43
44
50
44
45
47
49
34
33
51
44
45
32
31
46
47
48

3. Clutch

24 Nut
52 Bush with Teeth
53 Clutch Centre
54 Nut
55 Washer
56 Clutch Case with Pinion 62 T
57 Intermediate Plate
58 Cork Insert Plate
59 Front Clutch Plate
60 Clutch Spring Plate
61 Spring Seat
62 Spring
63 Safety Ring
64 Clutch Lever
65 Push Rod
66 Adjusting Screw
67 Pin
68 Ring
69 Ball

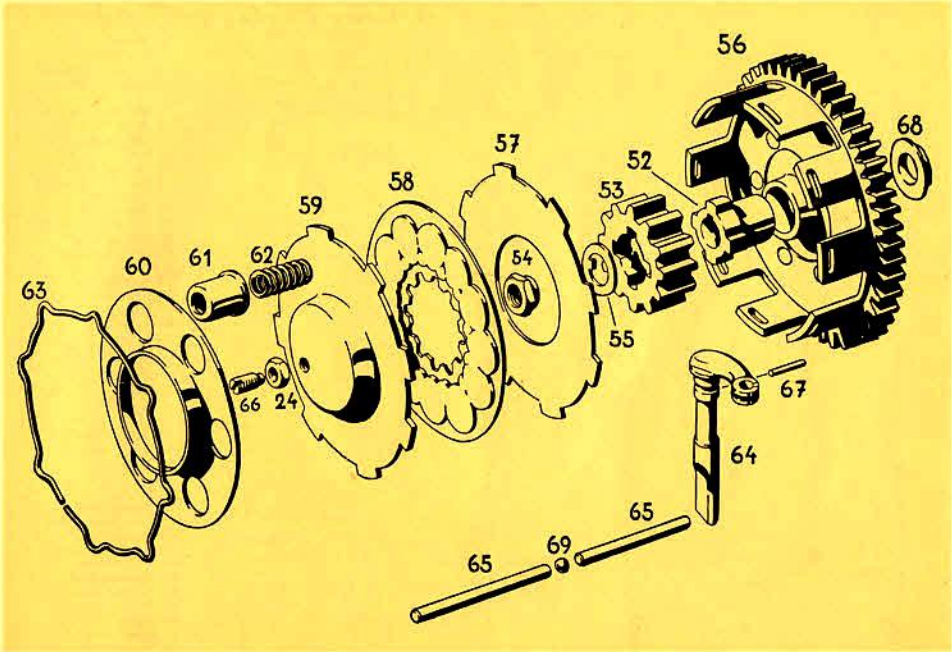
56
68
57
52
53
58
59
54
60
61
62
63
55
67
66
24
64
65
65
69

4. Gear Parts

20 Nut
24 Nut
47 Washer
48 Nut
70 Gearbox Mainshaft
71 Mainshaft Slider 16 T
72 Mainshaft Pinion 20 T
73 Ball Bearing
74 Key
75 Circlip
76 Gear Box Layshaft
77 Pinion 30 T
78 Pinion 24 T
79 Layshaft Pinion 20 T
80 Sealing Ring
81 Drive Sprocket
82 Screw
83 Washer
84 Gear Indicating Hand
85 Screw
86 Spring
87 Operator Fork
88 Axle
89 Spring
90 Operator
91 Upper Pin
92 Pin
93 Safety Plate
94 Spring
95 Washer
96 Cotter Pin
97 Spring Nut
98 Spring Plate
99 Kick Starter Shaft
100 Segment with Shaft
101 Inside Operator
102 Gear Selector
103 Operator Fork
104 Control Plate
105 Washer
106 Screw
107 Gear Lever
108 Washer

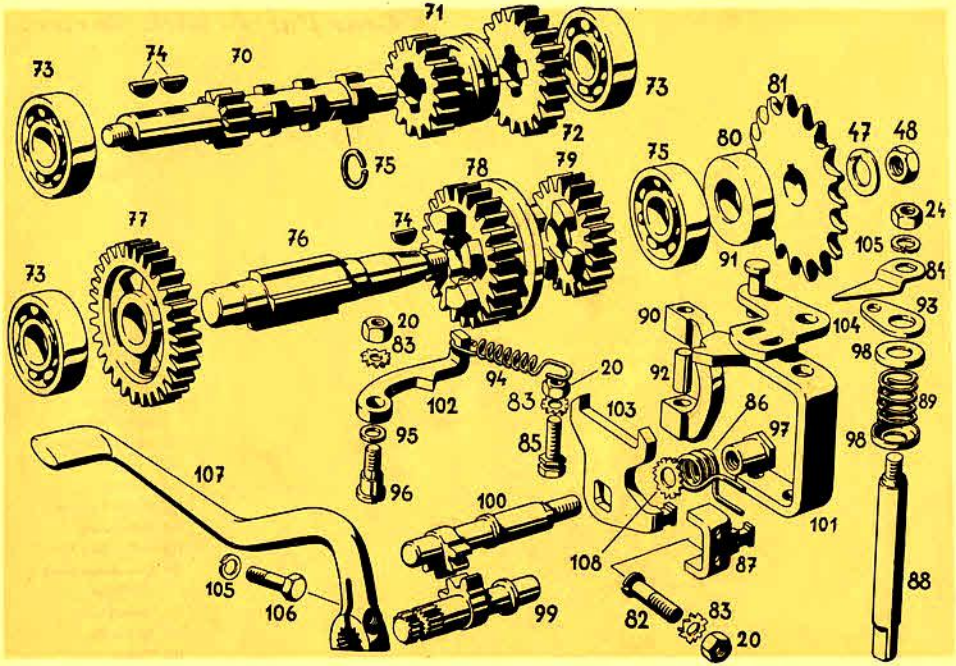

71
73
74
70
73
72
75
81
80
47
48
75
78
79
24
77
74
76
105
91
84
73
20
83
90
104
93
94
20
92
98
102
83
103
86
89
95
85
97
98
107
96
100
101
108
87
105
106
99
82
83
88
20

5. Kick Starter

24 Nut
105 Washer
109 Kick Starter Pinion 19 T
110 Ratchet Lock Half
111 Spring
112 Disk
113 Kick Starter Return Spring
114 Kick Starter Shaft
115 Circlip
116 Clipring
117 Rubber Damper
118 Sealing Ring
119 Sealing Ring Box
120 Kick Starter Crank with Pedal
121 Cotter Pin
122 Anchor Pin
123 Washer

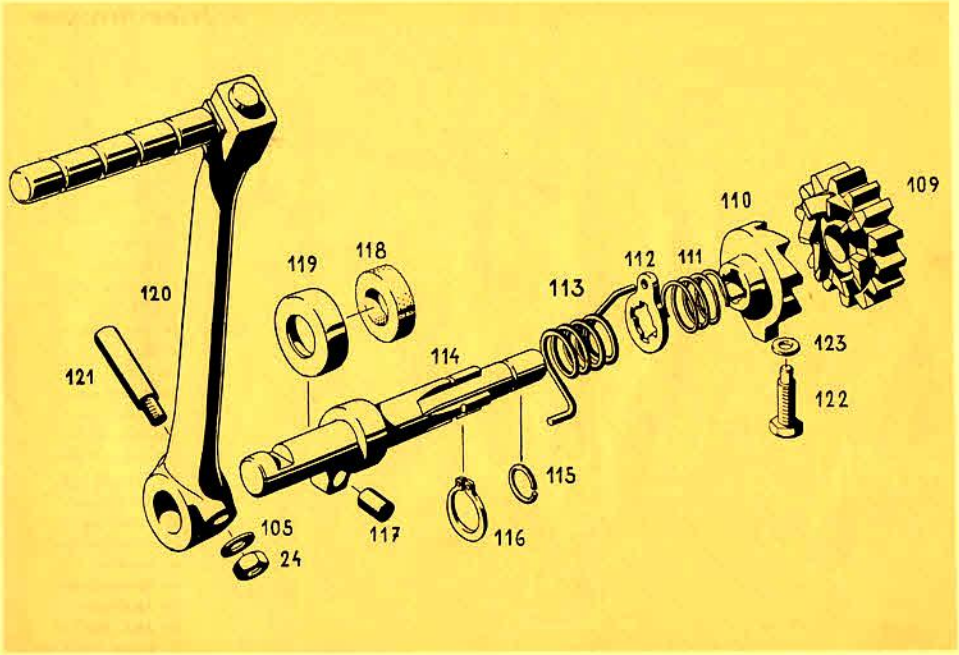
109
110
111
112
113
114
115
116
117
118
119
120
121
122
123
105
24

6. Carburetter

124 Body
125 Jet
126 Jet Seat
127 Throttle
128 Needle Valve
129 Cover
130 Top Ring
131 Bottom Screw
132 Washer
133 Safety Plate
134 Fuel Needle
135 Float
136 Anchor Pin
137 Cover Screw
138 Body Clip Screw
139 Cable Adjuster
140 Cable Adjuster Nut
141 Tickler
142 Tickler Split Pin
143 Tickler Spring
144 Intake
145 Throttle Spring
146 Air Cleaner
147 Air Cleaner Clip with Screw and Nut

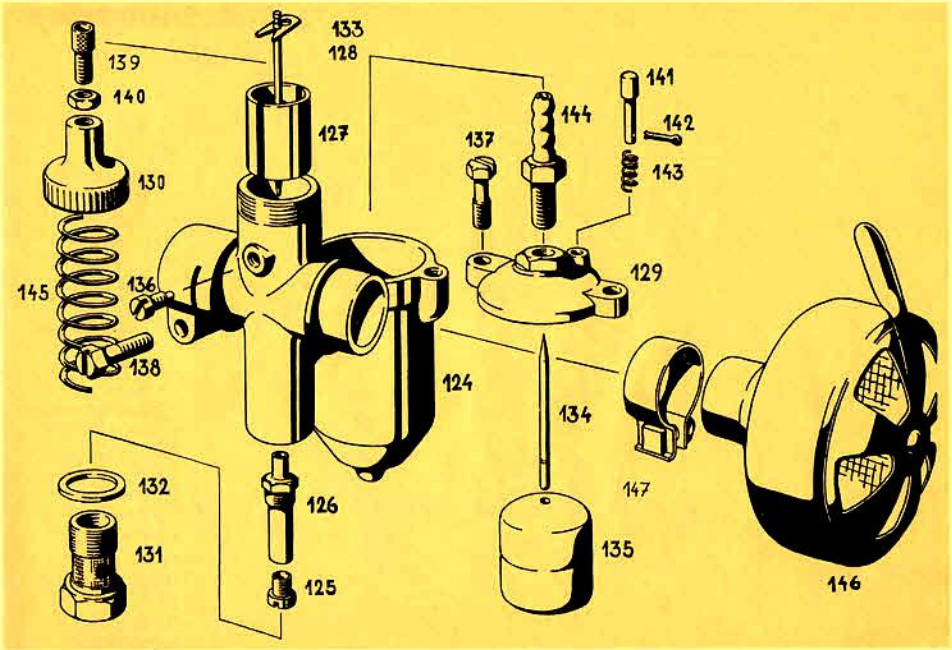
133
128
139
140
127
141
144
142
137
143
130
129
145
136
138
124
134
147
132
126
131
135
125
146

7. *Ignition, Head Lamp*

148 Flywheel Magneto
15 Watt, complete
149 Condenser
150 Contact Breaker,
151 High-tension Coil
152 Lighting Coil
153 Key
154 High-tension Lead,
complete
155 Sparking Plug
156 Head Lamp,
complete with Bulb
and Switch
157 Lamp Body
158 Bulb Holder
159 Bulb, 6 Volt
15/15 Watt
160 Spring
161 Mirror
162 Lamp Glass
163 Washer
164 Lamp Rim
165 Head Screw

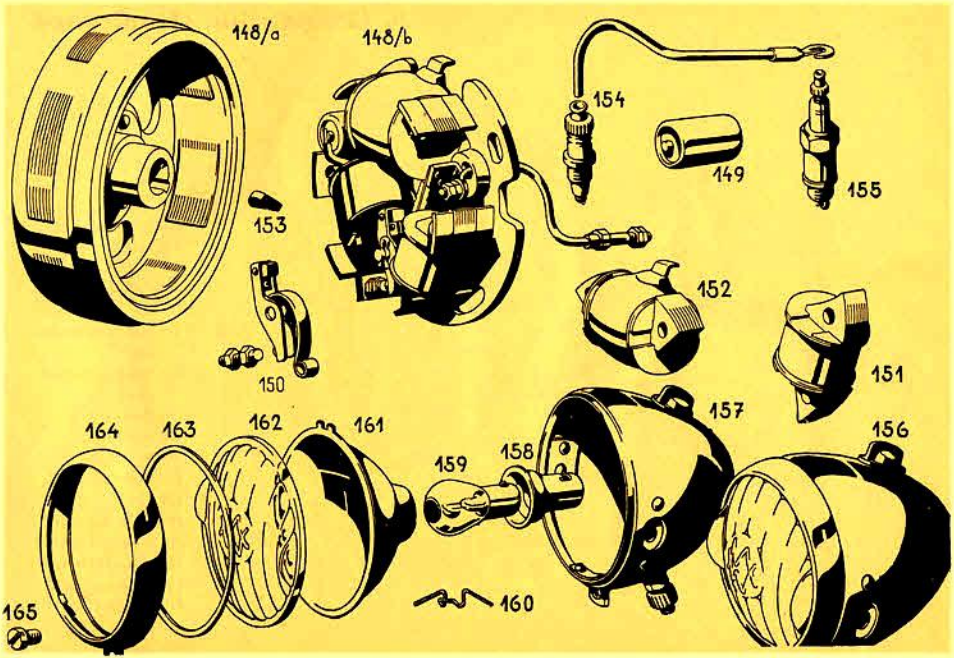
148/a
148/b
154
149
155
153
152
151
150
157
156
164
163
162
161
159
158
165
160

8. Frame, Rim, Mudguard

24 Nut
105 Lock Washer
166 Frame, complete
167 Ball Cup
168 Balls, 5/32
169 Mudguard, front
170 Rod for Mudguard, upper
171 Rod for Mudguard, lower
172 Head Screw
173 Head Screw
174 Head Screw
175 Mudguard, rear
176 Rim
177 Spoke, 225 mm
178 Spoke, 195 mm
179 Spoke, 190 mm
180 Nipple
181 Wired-on Tyre, 2.50-19
182 Tube

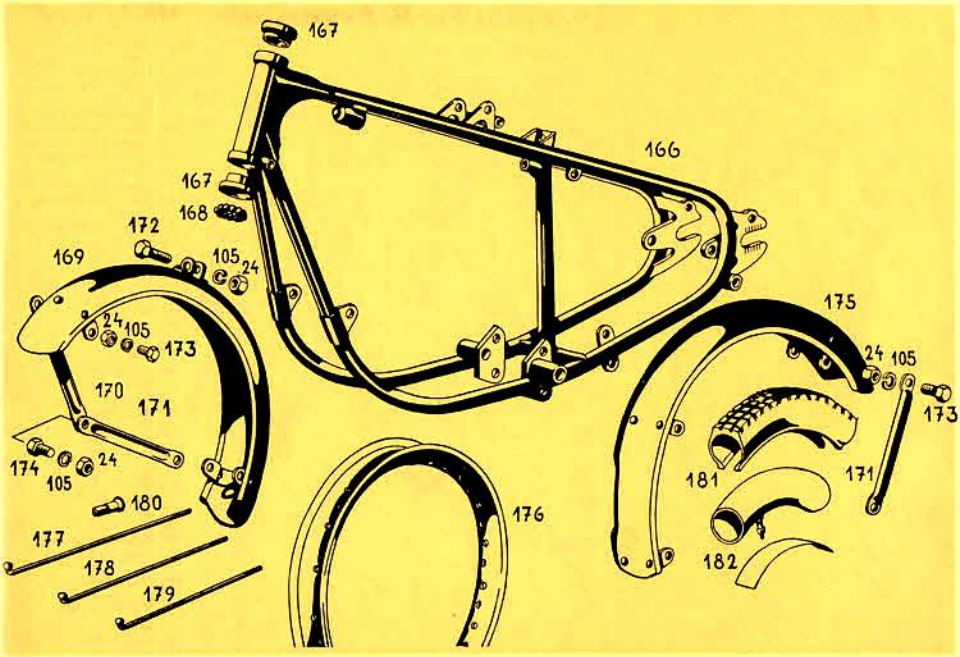
167
166
167
168
172
169
105
24
24
105
173
170
171
174
105
24
180
177
178
179
176
175
24
105
173
171
181
182

9. Front Fork, Handlebar

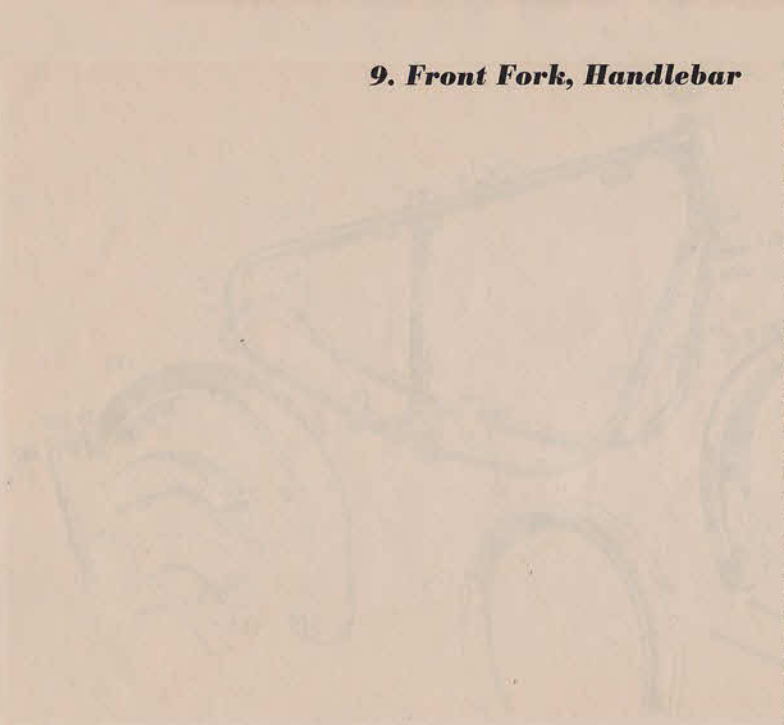

24 Nut
105 Lock Washer
172 Head Screw
183 Fork
184 Upper Fork Piece
185 Upper Fork Piece half
186 Upper Spring Plate
187 Upper Distance Piece
188 Upper Rocker
189 Upper Rocker with Thread
190 Lower Rocker
191 Lower Rocker with Thread
192 Lower Fork Piece with Steering Column
193 Cap Nut
194 Bush
195 Lower Axle
196 Bolt
197 Bolt
198 Bolt
199 Nut
200 Fibre Disk for Shock Absorber
201 Spring
202 Wing Nut for Shock Absorber
203 Split Pin
204 Fork Fastening Sleeve
205 Steering Damper Head with Rod
206 Safety Plate
207 Handlebar
208 Rubber Grip
209 Head Screw
210 Nut
211 Lock Washer
212 Ball Plate
213 Ball Plate with Thread
214 Lampholder
216 Screw

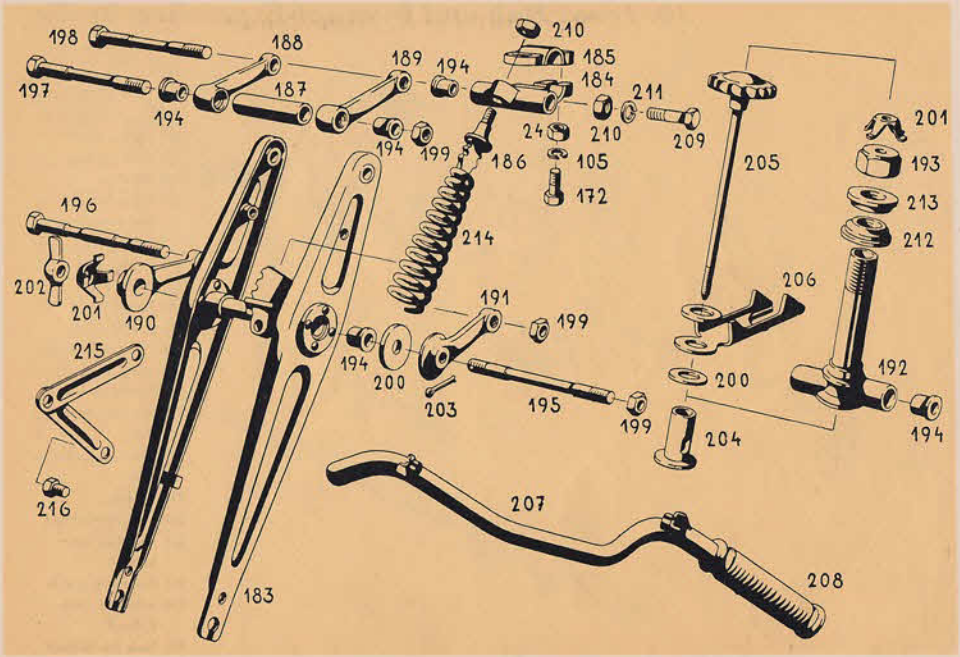
198
188
210
185
189
194
184
197
187
211
194
24
210
209
201
194
199
186
105
205
193
172
196
213
214
212
202
206
201
190
191
199
215
194
200
200
192
203
195
199
194
204
216
207
208
183

10. Front Hub and Internal-Expanding Brake

217 Sealing Ring
218 Balls 1/4 Ring
219 Ball Cup
220 Front Hub with Brake Drum
221 Brake Shoe
222 Brake Lining
223 Rivet
224 Spring
225 Expander Bolt
226 Front Brake Drum Cover, complete
227 Operating Arm
228 Nut for Expander Bolt
229 Nut for Front Wheel Axle
230 Washer
231 Lock Nut L.-Hand
232 Adjusting Cone L.-Hand
233 Front Wheel Axle
234 Adjusting Cone, R.-Hand
235 Lock Nut R.-Hand

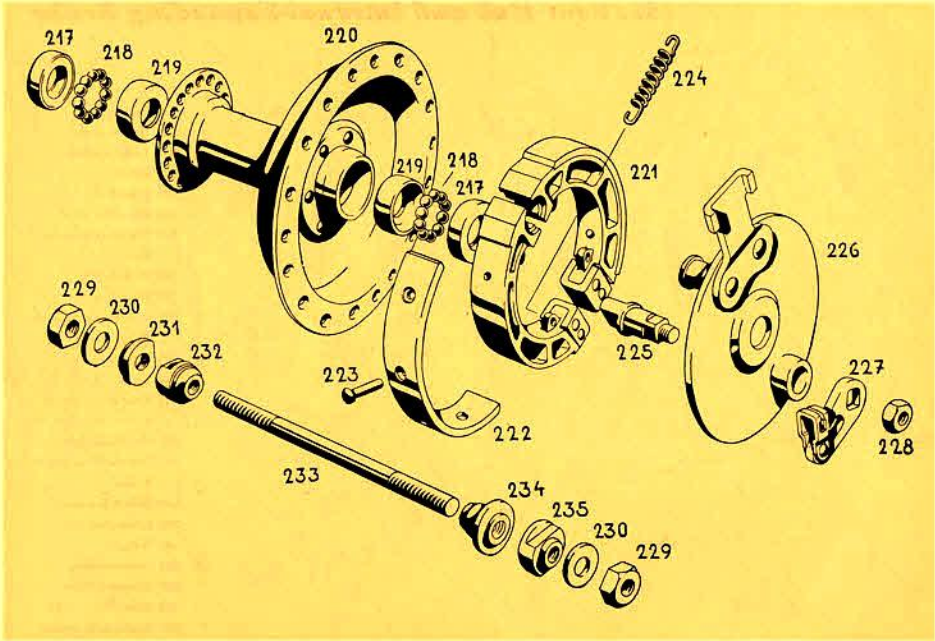
217
218
219
220
224
219
218
217
221
226
229
230
231
232
223
225
227
228
222
233
234
235
230
229

11. Rear Hub and Internal-Expanding Brake

20 Nut
217 Sealing Ring
221 Brake Shoe
222 Brake Lining
223 Rivet
224 Spring
225 Expander Bolt
228 Nut for Expander Bolt
236 Ball Bearing
237 Rear Sprocket
238 Rear Hub with Brake Drum
239 Washer
240 Screw
241 Rear Brake Drum Cover, complete
242 Operating Arm
243 Nut for Rear Wheel Axle
244 Rifled Washer
245 Collar Nut
246 Nut
247 Distance Ring
248 Distance Tube
249 Rear Wheel Axle
250 Chain Adjuster, Set

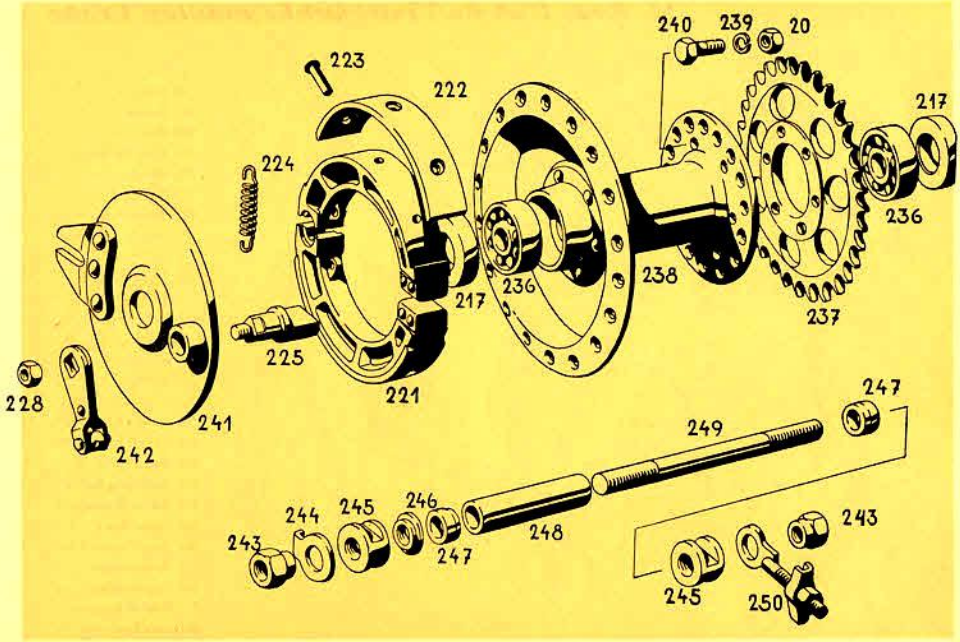
240
239
20
223
222
217
224
236
238
217
236
237
225
221
228
241
242
247
249
244
245
246
248
243
247
243
245
250

12. Clutch-, Front Brake and Gas Cable

20 Nut
24 Nut
105 Washer
173 Bolt
239 Lock Washer
251 Clutch Lever
252 Bolt
253 Clutch Cable complete, Inner and Outer, with Adjuster and Nut
254 Front Brake Lever
255 Front Brake Cable complete, Inner and Outer, with Adjuster and Nut
256 Twist-Grip
257 Twist-Grip Fix Part
258 Cable Adjusting Pin
259 Screw
260 Twist-Grip Spring
261 Gas Cable complete
262 Cable Sleeve
263 Rear Number Plate Holder, upper
264 Rear Number Plate Holder, lower
265 Cat's Eye

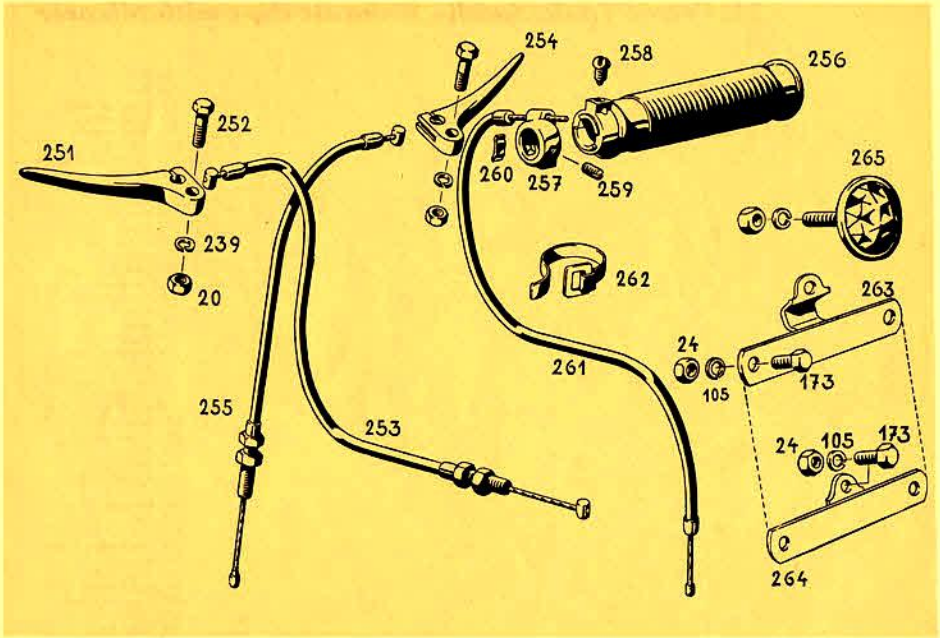
254
258
256
252
251
260
257
259
265
239
20
262
263
24
105
173
261
255
253
24
105
173
264

13. Petrol Tank, Saddle, Exhaust Pipe with Silencer

20 Nut
24 Nut
105 Securing washer
172 Head screw
174 Head screw
210 Nut
266 Filler Cap complete
267 Filter
268 Petrol Tank
269 Screw
270 Packing
271 Tapped Sleeve
272 Petrol Tap complete
273 Fuel Pipe complete
274 Saddle Cover
275 Rivet
276 Rivet
277 Bush
278 Distance Tube
279 Bolt
280 Carrier complete
281 Distance Piece
282 Upper Spring Seat
283 Spring
284 Spring bolt
285 Nut
286 Bolt
287 Washer
288 Cotter Pin
289 Packing
290 Nut
291 Exhaust Pipe
292 Connecting Piece
293 Screw
294 Exhaust Box
295 Inner Piece
296 Distance Sleeve
297 Distance Sleeve
298 Long Bolt

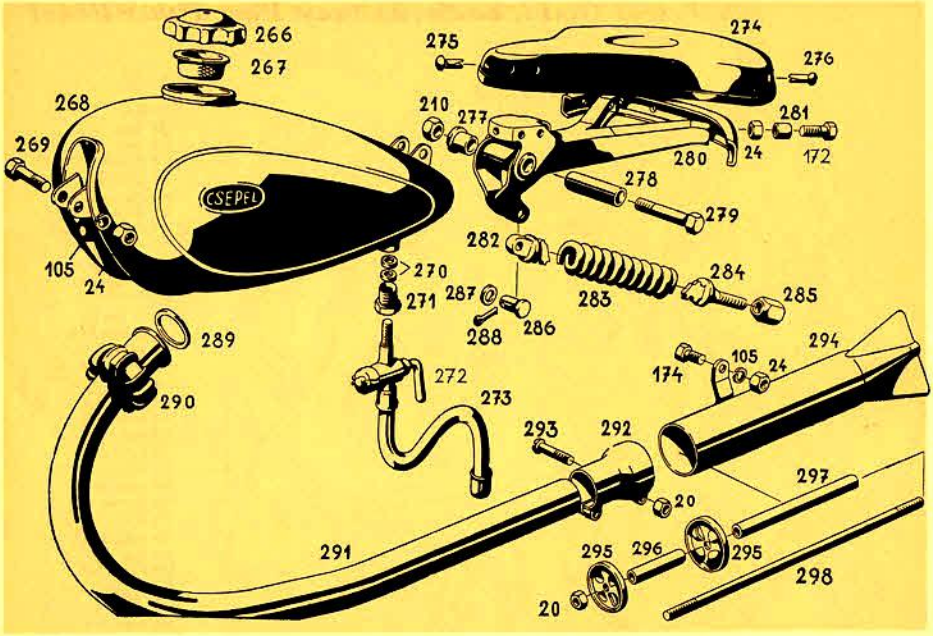
266
267
268
269
105
24
CSEPEL
275
274
276
210
277
281
280
24
172
278
279
282
270
271
287
288
286
283
284
285
289
290
272
273
174
105
24
294
293
292
297
20
291
295
296
295
298
20

14. Footrests, Stay, Rear Brake Pedal

20 Nut
49 Nut
299 Securing Washer
300 Distance Piece
301 Distance Piece
302 Distance Piece
303 Distance Piece
304 Motor Connecting Screw, front
305 Motor Connecting Screw, rear
306 Bolt
307 Washer
308 Rubber Footrest
309 Tube
310 Securing Washer
311 Nut
312 Stay
313 Spring
314 Bush
315 Pedal
316 Cotter
317 Split Pin
318 Washer
319 Washer
320 Pedal Axle
321 Split Pin
322 Forked Nut
323 Operating Rod
324 Nut
325 Stay Clip

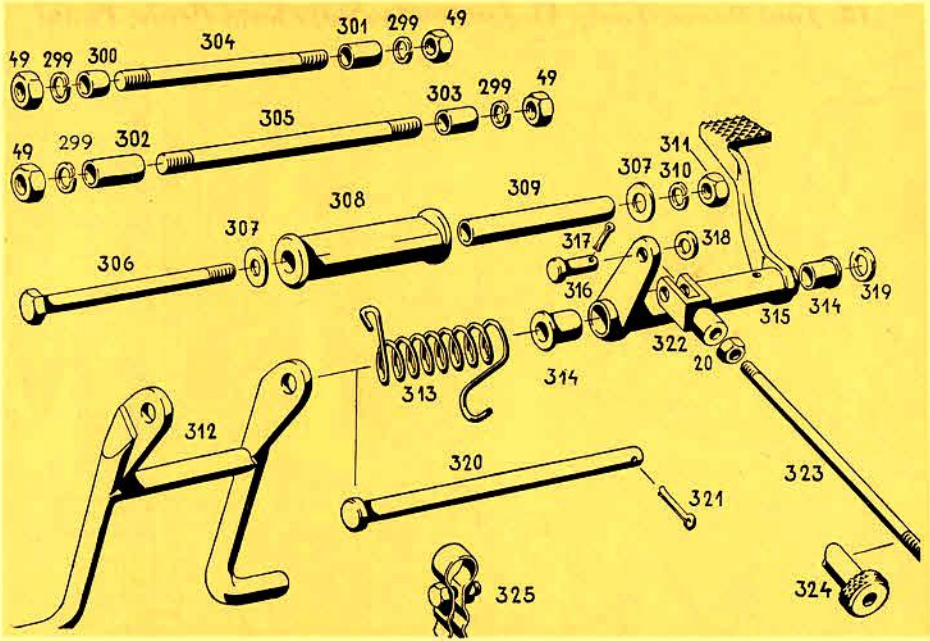
49
299
300
304
301
299
49
49
299
302
305
303
299
49
49
299
300
304
301
299
49
306
307
308
309
307
310
311
317
316
318
315
314
319
322
20
314
313
312
320
321
323
325
324

15. Tool Boxes, Tools, Luggage Carrier, Chain Cover, Chain

24 Nut
105 Securing Washer
210 Nut
211 Securing Washer
326 Tool Box and Cover, left
327 Tool Box and Cover, right
328 Locking Screw
329 Clip
330 Headscrew
331 Brake Fixing Screw
332 Screw Driver
333 Spanner
334 Combined Spanner
335 Ring Spanner
336 Spanner 13x15
337 Spanner 9x11
338 Tube Spanner 17
339 Tube Spanner 11
340 Sparking Plug Spanner
341 Tube Spanner 14
342 Tyre Levers
343 Luggage Carrier
344 Screw
345 Chain Cover
346 Chain
347 Chain Link
348 Pump
349 Horn

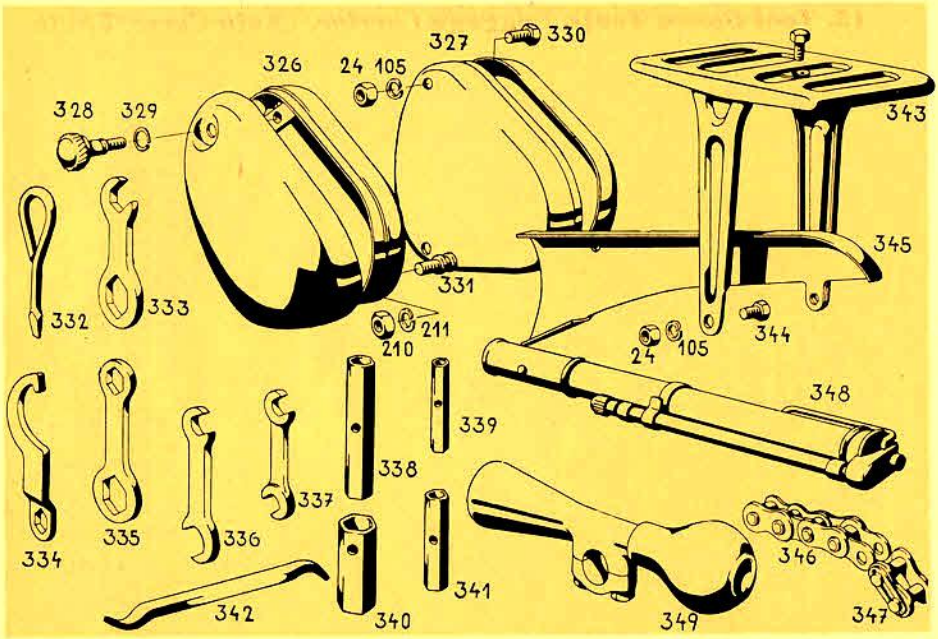
326
327
330
24
105
328
329
343
345
331
332
333
211
210
24
105
344
348
339
338
337
334
335
336
341
340
342
349
346
347

16. Accumulator Lighting, Electric Horn, Battery Box

159 Bulb, 6 Volt 15/15 Watt,
162 Lamp Glass and Rim (164)
350 Mirror
351 Small Bulb 6 Volt 1.5 Watt
352 Bulb Holder
353 Head Lamp Body
354 Cover Plate (in case of speedometer being not fitted)
355 Bracket
356 Screw
357 Mounting Plate with Fittings
358 Choke coil
359 Adjusting Screw, Washer, Isolating Ring, Nut
360 Rectifier
361 Electric Cables, complete
362 Switch complete
363 Electric Horn complete
364 Tail Lamp with Fittings
365 Accumulator complete 6 Volt 7 Amp. hours
366 Washer
367 Battery Box with Fittings

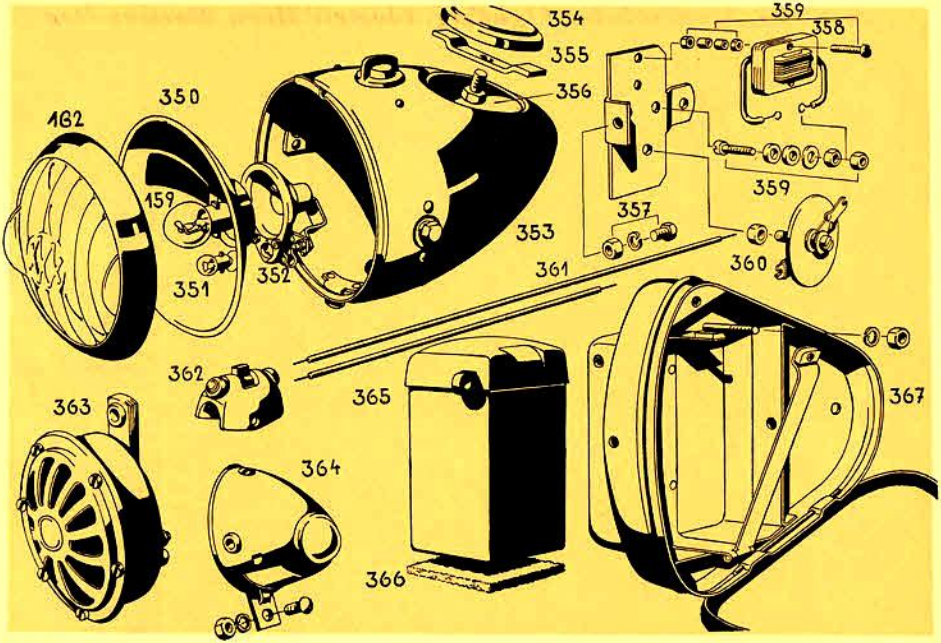
354
355
356
359
358
350
162
159
351
352
353
357
359
360
361
362
363
364
365
366
367

17. Number Plates, Speedometer

20 Nut
24 Nut
105 Securing Washer
174 Head Scre
239 Securing Washer
368 Number Plate, Front
369 Adjusting Screw
370 Number Plate, rear
371 Lower Plate
372 Washer
373 Screw
374 Speedometer
375 Washer
376 Clip
377 Nut
378 Driving Cable
379 Bush
380 Helical Gear
381 Bush
382 Front Brake Drum Cover, complete
383 Adjusting Screw
384 Pin
385 Oil Cup
386 Front Hub with Speedometer Gear
387 Ring

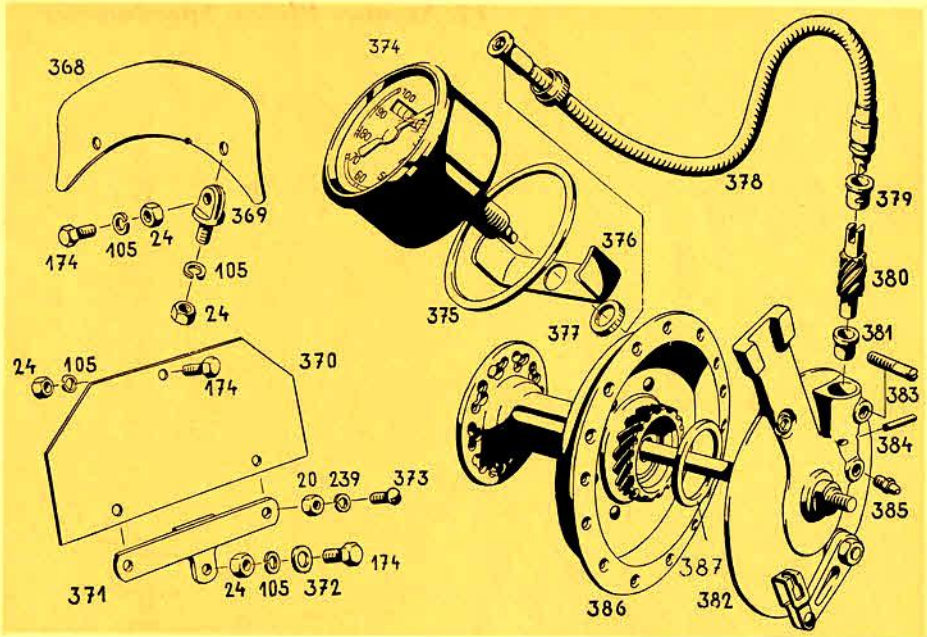
368
369
174
105
24
105
24
374
375
376
377
378
379
380
381
383
384
385
386
387
382
370
24
105
174
20
239
373
371
24
105
372
174

FERUNION

HUNGARIAN COMPANY FOR FOREIGN TRADE OF TECHNICAL PRODUCTS

ADDRESS: BUDAPEST, 53. P. O. B. 74. CABLE-ADDRESS: "FERUNION" BUDAPEST